Crawler Tractors

PR 736 PR 746 PR 756

Litronic® Litronic® Litronic®

Operating Weight

20,500 – 25,300 kg / 45,195 – 55,777 lb
28,300 – 30,800 kg / 62,370 – 67,900 lb
38,300 – 42,180 kg / 84,430 – 92,990 lb

Engine Output

SAE J1349	ISO 9249
150 kW / 201 HP	150 kW / 204 HP
185 kW / 248 HP	185 kW / 252 HP
250 kW / 336 HP	250 kW / 340 HP
Tier 4f	EU Stage IV

LIEBHERR

Performance
Outstanding pushing and ripping performance

Efficiency
Cost efficiency comes standard

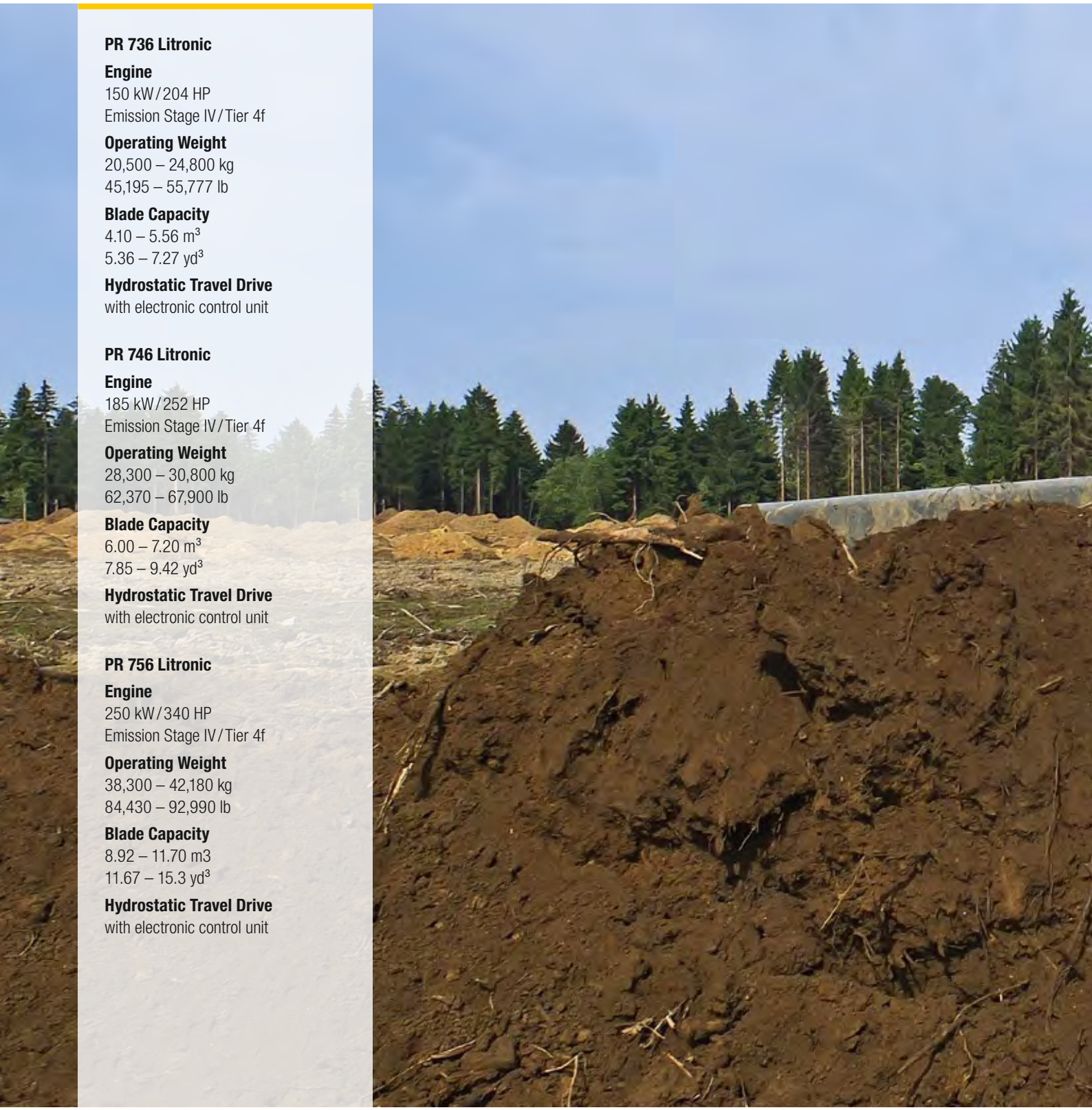

PR 736 Litronic

Engine
150 kW / 204 HP
Emission Stage IV / Tier 4f

Operating Weight
20,500 – 24,800 kg
45,195 – 55,777 lb

Blade Capacity
4.10 – 5.56 m^3
5.36 – 7.27 yd^3

Hydrostatic Travel Drive
with electronic control unit

PR 746 Litronic

Engine
185 kW / 252 HP
Emission Stage IV / Tier 4f

Operating Weight
28,300 – 30,800 kg
62,370 – 67,900 lb

Blade Capacity
6.00 – 7.20 m^3
7.85 – 9.42 yd^3

Hydrostatic Travel Drive
with electronic control unit

PR 756 Litronic

Engine
250 kW / 340 HP
Emission Stage IV / Tier 4f

Operating Weight
38,300 – 42,180 kg
84,430 – 92,990 lb

Blade Capacity
8.92 – 11.70 m3
11.67 – 15.3 yd^3

Hydrostatic Travel Drive
with electronic control unit

Reliability
Robust design
in every regard

Comfort
Ample space, ergonomics
and comfort – All in one

Maintainability
Simple maintenance and an
extensive service network

Performance

Outstanding Pushing and Ripping Performance

Power and innovative technology are the hallmarks of Liebherr crawler tractors. Whether for heavy ripping work, moving material or fine-grading, Generation 6 crawler dozers are powerful machines for every application.

High Productivity

Powerful Engines …
Liebherr diesel engines are designed for the harsh conditions of construction sites and provide the right amount of power in every situation. Depending on the job requirements different operating modes are available for maximum power or fuel-saving operation.

… and an Intelligent Drive System
The hydrostatic travel drive operates smoothly and automatically adjusts the working speed to the load conditions. The engine's power is always transmitted to both tracks without interruption. This permits exact and powerful steering; track slip is minimised and operators can concentrate completely on their work.

Safe on Every Terrain
The drive components have been placed to provide a very low centre of gravity while still ensuring maximum ground clearance. Together with solid belly pans this permits safe, reliable operation when performing challenging work on slopes and embankments. For even better traction, the PR 756 undercarriage can be configured with bogie suspension.

Precise Control

Excellent Maneuverability
When working in tight areas, the hydrostatic travel drive offers an additional benefit. All steering motions – including turning on the spot – are fast and effortless. In ripping work, the ripper can be positioned precisely between hard layers of rock and break out the material with ease.

Outstanding Grading Characteristics
Crawler tractors in the mid-sized class must provide maximum versatility. Generation 6 crawler dozers from Liebherr offer an exceptionally smooth ride, precision blade control and a perfect view of the blade. This ensures maximum productivity both when pushing heavy material and when finegrading.

Automatic Machine Control
2-D or 3-D machine control is becoming increasingly indispensable to enhancing the productivity of the operator and machine. Thanks to their stepless drive concept, Liebherr crawler tractors are ideal for this type of control. Factory-installed preparation kits are offered for all common system, giving customers maximum flexibility when selecting the control system that best meets their needs.

Liebherr-Hydrostatic Drive
- Automatic speed and torque adjustment optimises transmission of engine power to the tracks as the load changes
- The high efficiency of the hydrostatic drive is available over almost the entire speed range. The drive's capabilities are especially beneficial when performing heavy pushing and ripping work

Intelligent Engine Control
- The electronically modelled power and torque curves ensure outstanding pushing power and a dynamic response to increasing loads
- On-demand power boost assures adequate power reserves, even under the most difficult working conditions

Precise Finegrading
- Long tracks and an extremely rigid oscillating bar keep the machine well balanced
- The precise working hydraulics and perfect matching of equipment and base machine provides optimal blade control at all times

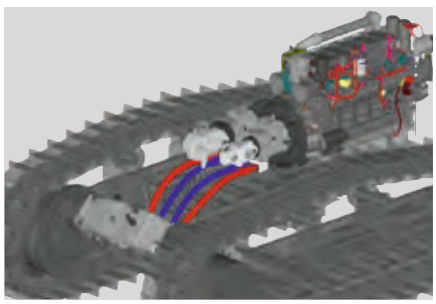

Efficiency

Cost Efficiency Comes Standard

Liebherr crawler tractors are designed from the ground up with economy in mind. A highly efficient drive concept, components with long service lives and low maintenance requirements reduce operating costs – and increase your profits.

Unrivalled Economy

The Latest Engine and Exhaust Technology
The newest generation of Liebherr diesel engines complies with Emission Stage IV/Tier 4 final. Liebherr-SCR technology: the exhaust gas undergoes selective catalytic reduction through injection of urea (DEF, AdBlue®). A diesel particulate filter is not required. As a result, the engine operates in a temperature range of maximum efficiency. The constant, low engine speed, in combination with Common Rail injection, ensures optimised cylinder charging and, in turn, even more efficient fuel combustion.

Highly Efficient Driveline
The high efficiency of the hydrostatic drive extends over almost the entire speed range. The engine's power is transmitted with minimum loss and fuel consumption is further reduced.

Lower CO_2 Emissions
With exhaust emission values that comply with the most stringent legislation and even greater fuel economy than that of previous models, Liebherr Generation 6 crawler dozers sets new standards for environmental friendliness. The "ecological footprint" is smaller than ever.

Optimised for Every Job

A Variety of Track Options
Thanks to various track sizes and track shoe options offered, Liebherr crawler tractors can be ideally configured for specific operating conditions – no matter if in rocky terrain, on steep slopes or soft ground.

Undercarriage with Rotary Bushings
As the perfect feature when working on very abrasive ground, Liebherr offers tracks with free-turning bushings (FTB). The large, rotating bushings minimise track and sprocket wear; in addition, chain links and rollers have even more wear material. This extends the service life of the entire undercarriage considerably in these specific applications.

Equipment for Special Applications
Applications such as handling of coal, wood chips or waste place enormous demands on crawler tractors. Specially developed equipment kits ensure maximum productivity and a long service life, even under these harsh operating conditions.

Eco-Mode
- The selectable Eco-Mode reduces the engine speed at the push of a button while maintaining the necessary power and lowering fuel consumption. Ideal for light- and medium-duty applications
- If the machine idles for an extended period of time, the engine can shut down automatically and avoid wasting fuel needlessly

PR 736 with 6-way blade
- Material deposition, filling up trenches, creating embankments or finish grading: the 6-way blade gives the PR 736 maximum versatility
- The optional blade with hinged corners limits the transport width to 3 m. Transporting the machine is fast and inexpensive

Always Informed with LiDAT
- The Liebherr LiDAT data transmission and positioning system contributes to effective fleet management
- Utilising the latest communication technology, LiDAT provides comprehensive operational data, allowing economical machine management, optimised resources, and remote monitoring

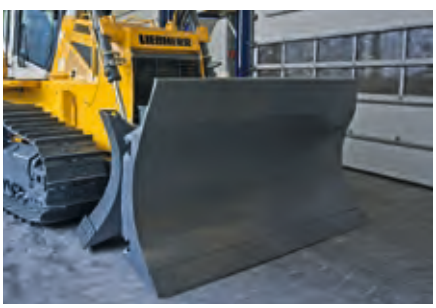

Reliability

Robust Design in Every Regard

Today's construction sites require machines with maximum versatility and ruggedness. Crawler tractors from Liebherr meet these requirements in an ideal manner: Thanks to components designed specifically for construction machinery, proven technology and innovative customer-specific solutions, you can expect maximum availability.

Liebherr Driveline

Long-Lasting Engines
Diesel engines from Liebherr have powered construction machinery around the world for decades. Developed for the harshest operating conditions, their rugged construction and low nominal operating speed guarantee maximum reliability and a long service life.

Wear-Free Drive Concept
The proven Liebherr hydrostatic travel drive does not need components such as a torque converter, manual gearbox, differential steering or steering clutches. The high-quality hydraulic pumps and motors operate reliably and practically without wear.

Long-Lasting Final Drives
The large final drives used in the Generation 6 crawler dozers are extremely robust and designed for the heaviest loads. Double mechanical seals with monitoring for leaks ensure reliable operation.

Rugged Design

Main Frame with a Proven Box-Section Design
The main frame is constructed using a proven box-section design, which provides maximum torsional stiffness and optimal absorption of forces. Cast steel is used for components subjects to high stress.

Optimised Equipment
L-shaped, welded push frames offer maximum strength and precise blade control. High-strength steel blades and optional, additional wear plates ensure a long service life. All ripper types are designed for heavy-duty ripping work, and areas exposed to wear are given special protection.

An Intelligent Cooling System
Hydraulically driven fans are activated as needed to regulate the operating temperature independently of the engine's speed. This guarantees short warm-up times and reliable cooling – even in extremely dusty surroundings. For especially critical operating conditions, a fan that reverses automatically can be provided.

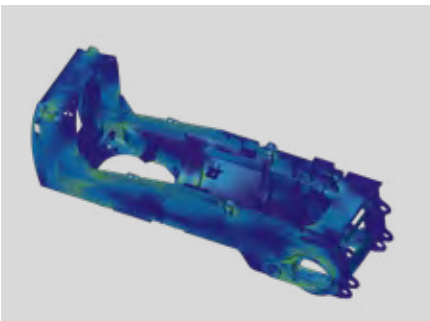

From the Screen to the Construction Site

- Optimised layout: at the development stage components are designed with state-of-the-art software tools
- Extensive test bench runs are the next important step in the development process
- Long-term field tests under rigorous conditions ensure maximum machine availability

Key Technologies from Liebherr

- Liebherr has decades of experience in developing, designing and manufacturing components and, as a result, offers maximum reliability
- Important key components such as diesel engines, spiltterboxes, hydraulic pumps, hydraulic cylinders, final drives and electronics are manufactured in our own facilities, optimised for combined operation and representing the highest quality

Optimised Track Components

- Noticeably larger sprockets on the PR 736 and PR 746 ensure maximum wear resistance
- The track tensioner is fully encapsulated and, as a result, ideally protected against material ingress
- As a further measure, the temperature of the final drives is monitored continuously, which increases the operating reliability of the machine even more

Comfort

Comfort, Space and Ergonomics: All in one

The completely redesigned working environment offers exceptional operator comfort. With its generous space, ergonomic layout and low sound levels, the Liebherr comfort cab provides the perfect conditions for fatigue-free and concentrated work.

Deluxe Cab

Ergonomic and Purposely Designed
The well-thought-out design of the operator's cab provides the best prerequisites for relaxed and productive work. All instruments and operating controls are carefully organised for easy reach. An unobstructed view of the work equipment and perfect all-round visibility allows the operator to concentrate fully on the task at hand.

Convenience in Daily Use
Carefully considered details such as a cooled storage compartment, additional footrests, adjustable joysticks and a powerful air conditioning system improve the operator's comfort and boost daily productivity.

Quiet and Dust-Free
Thanks to effective sound insulation and modern, low-noise diesel engines, the PR 736, PR 746 and PR 756 feature extremely low noise levels that lie well below the legal limits. The pressurised cab keeps the operator's environment free of dust from the surroundings.

Simple and Intuitive Operation

Single-Lever Control
All driving functions can be controlled smoothly and precisely with only one operating lever – including the "turning on the spot" function. The travel joystick is optionally available in either a proportional or a detented version – this allows control to be matched optimally to the needs of the operator.

Safety-Plus Comfort Seat
The standard air-sprung seat adjusts perfectly to the operator and deactivates the machine automatically on exiting the cab.

The Hydrostatic Drive as Service Brake
The crawler tractor operates with continious power on both tracks even when driving on slopes. Thanks to the self-locking nature of the hydrostatic drive system, the operator can bring the machine to a stop at any time simply by returning the joystick to the "neutral" position – or by depressing the inching pedal. An automatically activated parking brake provides additional safety.

Individual Set-Up
- The intuitive touch-controlled screen conveniently displays all important operating data
- At the push of a button, the operator can adjust a wide variety of machine settings – for example, the response of the travel drive – precisely to his needs

Intuitive Control
- The new, ergonomically shaped joysticks are adjustable forward and back
- 3 speeds can be programmed individually
- In addition, an inching pedal is available. It can be operated with or without lowering the engine speed – perfect customisation for the operator

Unrivalled Visibility
- A plus for safety: larger panoramic windows, downward-sloping edges all-round and the integrated ROPS/FOPS protection give the operator unmatched all-round visibility
- Greater productivity: thanks to a higher seat position, wider doors and optimised engine covers, the operator always has an excellent view of the work equipment

Maintainability

Simple Maintenance and an Extensive Service Network

Thanks to their minimal maintenance requirements, Liebherr crawler tractors make a reliable contribution to your economic success. A dense service network means short distances, efficient structures and fast response times for the user.

Cost-Effective Maintenance

Simple Daily Checks
All items that the operator checks during daily routine inspections are readily accessible on one side of the engine. The hydraulically tilted cab provides easy access to components as well. Service work can be performed quickly and efficiently.

Long Maintenance Intervals
Perfectly matched components and lubricants allow for exceptionally long maintenance intervals, e.g. up to 2,000 operating hours for the diesel engine. Hydraulic oil change intervals of up to 8,000 operating hours save costs and minimise downtime.

Optimal Planning

Planned Costs
Liebherr crawler dozers come with extensive standard warranties for the entire machine and the drive train. Customised inspection and service programs allow optimal planning of all maintenance activities.

Remanufacturing
The Liebherr remanufacturing program offers cost-effective reconditioning of components to the highest quality standards. Various reconditioning levels are available: Replacement components, general overhaul or repair. The customer receives components with original part quality at a reduced cost.

The Focus is on the Customer

Competent Advice and Service
Competent advice is a given at Liebherr. Experienced specialist provide decision- guidance for your specific requirements: application-oriented sales support, service agreements, original parts management, as well as remote data transmission for machine planning and fleet management.

Continuous Dialogue with Users
We utilise the expert knowledge and practical experience of our customers to consistently optimise our machines and services – real solutions for real situations.

Easy Access
- All service points are centrally located and easily accessible. Thanks to wide-opening access doors, the daily inspection of the machine is simple and time-saving
- Lubrication points for the oscillating bar bearings are easily reached in the engine compartment
- The standard lighting of the engine area simplifies maintenance and inspection

Tilt-Out Cooling Fan
- In especially dusty applications, the swing-out fan in Generation 6 crawler tractors contributes significantly to easy cleaning of the cooling system. The radiator grille requires no tools to open
- The additional hydraulic oil cooler fan at the rear of models PR 746 and PR 756 is also hinged

Rapid Spare Parts Service
- 24-hour delivery: Spare parts service is available for our dealers around the clock
- Electronic spare parts catalogue: Fast and reliable selection and ordering via the Liebherr online portal
- With online tracking, the current processing status of your order can be viewed at any time

Technical Data PR 736

Engine

Liebherr Diesel engine	D 934 A7 Emission regulations according to 97/68/EC, 2004/26/EC Stage IV, EPA/CARB Tier 4f
Rated power (net) ISO 9249 SAE J1349	 150 kW/204 HP 150 kW/201 HP
Maximum power (net) ISO 9249 SAE J1349	 175 kW/238 HP 175 kW/235 HP
Rated speed	1,800 rpm
Displacement	7.0 l/427 in^3
Design	4 cylinder in-line engine, water-cooled, turbocharged, air-to-air intercooler
Injection system	Direct fuel injection, Common Rail, electronic control
Lubrication	Pressurised lube system, engine lubrication guaranteed for inclinations up to 45°, on all sides
Operating voltage	24 V
Alternator	140 A
Starter	7.8 kW/11 HP
Batteries	2 x 180 Ah/12 V
Air cleaner	Dry-type air cleaner with pre-cleaner, main and safety elements, control light in the operator's cab
Cooling system	Combi radiator, comprising radiators for water, hydraulic fluid, charge air. Hydrostatic fan drive.

Hydraulics

Hydraulic system	Load sensing (demand-controlled)
Pump type	Swash plate piston pump
Pump flow max.	207 l/min./54.6 gpm/45.5 Imp.gpm
Pressure limitation	260 bar/3,770 psi (6-way blade) 200 bar/2,900 psi (Straight blade)
Control valve	2 segments, expandable to 4
Filter system	Return filter with magnetic rod in the hydraulic tank
Control	Single joystick for all blade functions

Travel Drive, Control

Transmission system	Infinitely variable hydrostatic travel drive, independent drive for each track
Travel speed*	Continuously variable
Speed range 1 (reverse):	0 – 4.0 km/h/2.5 mph (4.5 km/h/2.8 mph)
Speed range 2 (reverse):	0 – 6.0 km/h/3.7 mph (8.0 km/h/4.9 mph)
Speed range 3 (reverse):	0 – 11.0 km/h/6.8 mph (11.0 km/h/6.8 mph)
	*Travel speed ranges can be set on the travel joystick (memory function)
Electronic control	The electronic system automatically adjusts travel speed and drawbar pull to match changing load conditions
Steering	Hydrostatic
Service brake	Hydrostatic (self-locking), wear-free
Parking brake	Multi-disk brake, wear-free, automatically applied with neutral joystick position
Cooling system	Hydraulic oil cooler integrated in combi radiator, hydrostatic fan drive
Filter system	Micro cartridge filters in replenishing circuit
Final drive	Combination spur gear with planetary gear, double-sealed (duo cone seals) with temperature control
Control	Single joystick for all travel and steering functions. Optional: detented joystick, with inching pedal

Operator‘s Cab

Cab	Resiliently mounted cab with positive pressure ventilation, can be tilted with hand pump 40° to the rear. With integrated ROPS Rollover Protective Structure (EN ISO 3471) and FOPS Falling Objects Protective Structure (EN ISO 3449)
Operator's seat	Air-suspended comfort seat, fully adjustable
Monitoring	Touch screen: display of current machine information, automatic monitoring of operating conditions. Individual setting of machine parameters

Undercarriage

	XL	LGP
Design	Undercarriage with rigid bottom rollers	
Mounting	Via separate pivot shafts and equalizer bar	
Track chains	Lubricated, single-grouser shoes, tensioning via a steel spring and grease tensioner	
Links, each side	45	45
Track rollers, each side	7	7
Carrier rollers, each side	2	2
Sprocket segments, each side	6	6
Track shoes, standard	610 mm/24"	711 mm/28" 812 mm/32"
Track shoes, optional	560 mm/22"	914 mm/36" 965 mm/38"

Sound Levels

Operator sound exposure ISO 6396	
L_{pA} (in the cab)	75 dB(A)
Exterior sound pressure 2000/14/EC	
L_{WA} (to the environment)	111 dB(A)

Refill Capacities

Fuel tank	430 l/113.5 gal/94.6 Imp.gal
Diesel Exhaust Fluid (DEF) tank	50 l/13.2 gal/11 Imp.gal
Cooling system	41 l/10.8 gal/9 Imp.gal
Engine oil, with filter	29 l/7.7 gal/6.4 Imp.gal
Splitter box	5.5 l/1.5 gal/1.2 Imp.gal
Hydraulic tank	111 l/29.3 gal/24.4 Imp.gal
Final drive XL (outside push frame), each side	15 l/4 gal/3.3 Imp.gal
Final drive XL (inside push frame), each side	22 l/5.8 gal/4.8 Imp.gal
Final drive LGP, each side	26.5 l/7 gal/5.8 Imp.gal

Drawbar Pull

Max.	312 kN
at 1.5 km/h/0.9 mph	275 kN
at 3.0 km/h/1.9 mph	154 kN
at 6.0 km/h/3.7 mph	77 kN
at 9.0 km/h/5.6 mph	51 kN

Dimensions PR 736

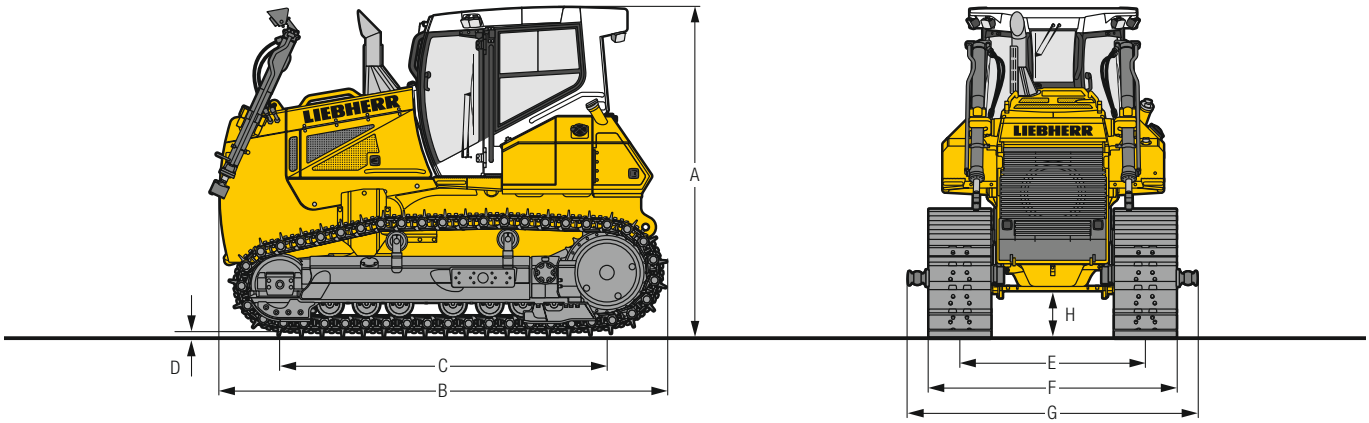

Dimensions

	Push frame		inside	outside	inside	outside
	Undercarriage		XL	XL	LGP	LGP
A	Height over cab	mm	3,248		3,248	
		ft in	10'8"		10'8"	
B	Overall length without attachments	mm	4,428		4,428	
		ft in	14'6"		14'6"	
C	Length of track on ground	mm	3,237		3,237	
		ft in	10'7"		10'7"	
D	Height of grousers	mm	65		65	
		ft in	2.5"		2.5"	
H	Ground clearance	mm	511		511	
		ft in	1'8"		1'8"	
E	Track gauge	mm	2,180	1,830	2,290	2,180
		ft in	7'2"	6'0"	7'6"	7'2"
G	Width over trunnions	mm	–	2,724	–	3,474
		ft in		8'11"		11'5"
F	Track shoes 560 mm / 22"					
	Width over tracks	mm / ft in	2,740 / 9'	2,390 / 7'10"	–	–
	Tractor shipping weight [1]	kg / lb	18,196 / 40,115	18,271 / 40,281		
F	Track shoes 610 mm / 24"					
	Width over tracks	mm / ft in	2,790 / 7'10"	2,440 / 8'0"	–	–
	Tractor shipping weight [1]	kg / lb	18,335 / 40,422	18,410 / 40,587		
F	Track shoes 711 mm / 28"					
	Width over tracks	mm / ft in	–	–	3,000 / 9'10"	–
	Tractor shipping weight [1]	kg / lb			18,634 / 41,081	
F	Track shoes 812 mm / 32"					
	Width over tracks	mm / ft in	–	–	3,102 / 10'2"	2,992 / 9'10"
	Tractor shipping weight [1]	kg / lb			18,913 / 41,696	19,156 / 42,232
F	Track shoes 914 mm / 36"					
	Width over tracks	mm / ft in	–	–	–	3,094 / 10'2"
	Tractor shipping weight [1]	kg / lb				19,452 / 42,884
F	Track shoes 965 mm / 38"					
	Width over tracks	mm / ft in	–	–	–	3,145 / 10'4"
	Tractor shipping weight [1]	kg / lb				19,604 / 43,219

[1] Including coolant and lubricants, 20 % fuel, ROPS / FOPS cab.

Front Attachments PR 736

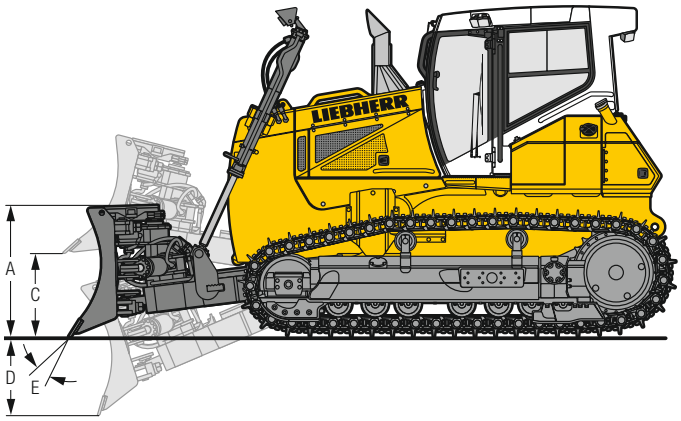

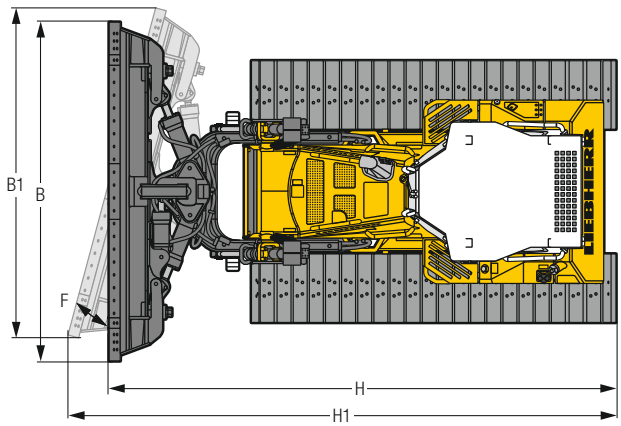

6-Way Blade with Inside Mounted Push Frame

			6-way blade	6-way blade with hinged corners	6-way blade	6-way blade with hinged corners
	Undercarriage		**XL**	**XL**	**LGP**	**LGP**
	Blade capacity, ISO 9246	**m³**	4.67	4.67	4.63	4.63
		yd³	6.11	6.11	6.06	6.06
A	**Height of blade**	**mm**	1,350	1,350	1,250	1,250
		ft in	4'5"	4'5"	4'1"	4'1"
B	**Width of blade**	**mm**	3,638	3,638	4,029	4,029
		ft in	11'11"	11'11"	13'3"	13'3"
B1	**Width of blade, angled**	**mm**	3,413	3,413	3,781	3,781
		ft in	11'2"	11'2"	12'5"	12'5"
	Transport width	**mm**	3,242	2,850	3,563	3,000 [2]
		ft in	10'8"	9'4"	11'8"	9'10"
C	**Lifting height**	**mm**	1,327	1,327	1,320	1,320
		ft in	4'4"	4'4"	4'4"	4'4"
D	**Digging depth**	**mm**	679	679	675	675
		ft in	2'3"	2'3"	2'3"	2'3"
E	**Blade pitch adjustment**		5°	5°	5°	5°
F	**Blade angle adjustment**		20°	20°	20°	20°
	Max. blade tilt	**mm**	545	545	606	606
		ft in	1'9"	1'9"	2'	2'
H	**Overall length, blade straight**	**mm**	6,077	6,077	6,060	6,060
		ft in	19'11"	19'11"	19'11"	19'11"
H1	**Overall length, blade angled**	**mm**	6,655	6,655	6,707	6,707
		ft in	21'10"	21'10"	22'0"	22'0"
	Track shoes 560 mm / 22"					
	Operating weight [1]	**kg / lb**	21,479 / 47,353	21,901 / 48,283	–	–
	Ground pressure [1]	**kg/cm² / psi**	0.59 / 8.39	0.60 / 8.53		
	Track shoes 610 mm / 24"					
	Operating weight [1]	**kg / lb**	21,618 / 47,659	22,040 / 48,590	–	–
	Ground pressure [1]	**kg/cm² / psi**	0.55 / 7.82	0.56 / 7.96		
	Track shoes 711 mm / 28"					
	Operating weight [1]	**kg / lb**	–	–	22,142 / 48,815	22,636 / 49,904
	Ground pressure [1]	**kg/cm² / psi**			0.48 / 6.83	0.49 / 6.97
	Track shoes 812 mm / 32"					
	Operating weight [1]	**kg / lb**	–	–	22,421 / 49,430	22,915 / 50,519
	Ground pressure [1]	**kg/cm² / psi**			0.43 / 6.11	0.44 / 6.26

[1] Including coolant and lubricants, 100 % fuel, ROPS / FOPS cab, operator, 6-way blade.
[2] Transport width 3,000 mm only with max. 711 mm (28") track pads.

Front Attachments PR 736

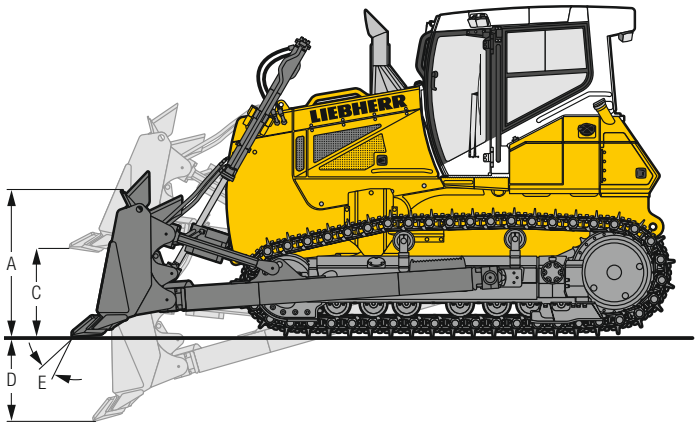

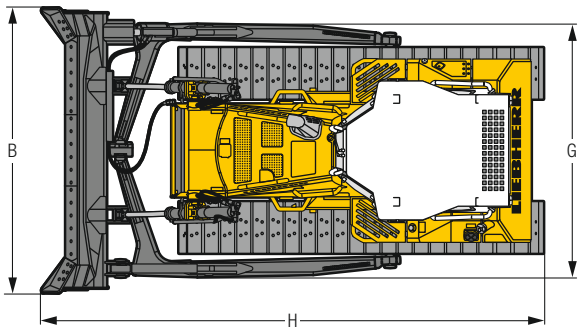

Semi-U Blade and Straight Blade

			Semi-U blade	Straight blade
	Undercarriage		**XL**	**LGP**
	Blade capacity, ISO 9246	**m³**	5.56	4.10
		yd³	7.27	5.36
A	**Height of blade**	**mm**	1,400	1,150
		ft in	4'7"	3'9"
B	**Width of blade**	**mm**	3,372	3,995
		ft in	11'1"	13'1"
C	**Lifting height**	**mm**	1,153	1,162
		ft in	3'9"	3'10"
D	**Digging depth**	**mm**	574	579
		ft in	1'11"	1'11"
E	**Blade pitch adjustment**		10°	10°
	Max. blade tilt	**mm**	432	395
		ft in	1'5"	1'4"
G	**Width over push frame**	**mm**	3,000	3,750
		ft in	9'10"	12'4"
H	**Overall length**	**mm**	5,970	5,709
		ft in	19'7"	18'9"
	Track shoes 560 mm / 22"			
	Operating weight [1]	**kg / lb**	21,040 / 46,385	–
	Ground pressure[1]	**kg/cm² / psi**	0.58 / 8.25	
	Track shoes 610 mm / 24"			
	Operating weight [1]	**kg / lb**	21,181 / 46,696	–
	Ground pressure[1]	**kg/cm² / psi**	0.54 / 7.68	
	Track shoes 812 mm / 32"			
	Operating weight [1]	**kg / lb**	–	22,411 / 49,408
	Ground pressure[1]	**kg/cm² / psi**		0.43 / 6.11
	Track shoes 914 mm / 36"			
	Operating weight [1]	**kg / lb**	–	22,707 / 50,060
	Ground pressure[1]	**kg/cm² / psi**		0.38 / 5.40
	Track shoes 965 mm / 38"			
	Operating weight [1]	**kg / lb**	–	22,859 / 50,395
	Ground pressure[1]	**kg/cm² / psi**		0.37 / 5.26

[1] Including coolant and lubricants, 100 % fuel, ROPS / FOPS cab, operator, semi-U or straight blade.

Rear Attachments PR 736

3-Shank Ripper

A	Ripping depth (max./min.)	mm ft in	512/362 1'8"/1'2"
B	Lifting height (max./min.)	mm ft in	676/526 2'3"/1'9"
C	Additional length, attachment raised	mm ft in	1,128 3'8"
D	Additional length, attachment lowered	mm ft in	1,460 4'9"
E	Overall beam width	mm ft in	2,320 7'7"
F	Distance between shanks	mm ft in	1,000 3'7"
	Max. pitch adjustment		–
	Weight	kg lb	1,919 4,231

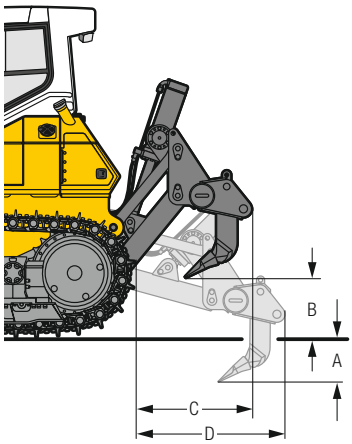

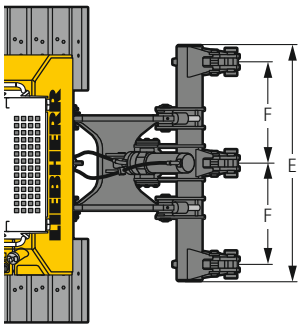

Drawbar

			rigid
A	Additional length	mm ft in	427 1'5"
B	Socket pin diameter	mm ft in	50 2"
C	Height of jaw	mm ft in	518 1'8"
D	Ground clearance	mm ft in	430 1'5"
	Jaw opening	mm ft in	95 3.7"
	Weight	kg lb	280 617

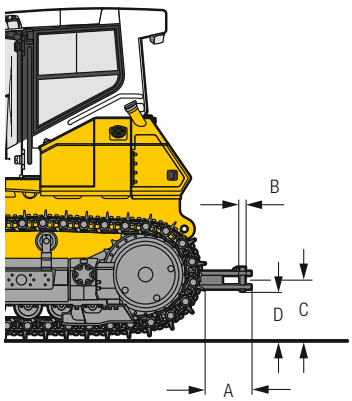

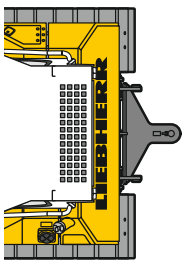

Technical Data PR 746

Engine

Liebherr Diesel engine	D 936 A7 Emission regulations according to 97/68/EC, 2004/26/EC Stage IV, EPA/CARB Tier 4f
Rated power (net) ISO 9249 SAE J1349	 185 kW/252 HP 185 kW/248 HP
Maximum power (net) ISO 9249 SAE J1349	 210 kW/286 HP 210 kW/281 HP
Rated speed	1,600 rpm
Displacement	10.5 l/641 in³
Design	6 cylinder in-line engine, water-cooled, turbocharged, air-to-air intercooler
Injection system	Direct fuel injection, Common Rail, electronic control
Lubrication	Pressurised lube system, engine lubrication guaranteed for inclinations up to 45°, on all sides
Operating voltage	24 V
Alternator	140 A
Starter	7.8 kW/11 HP
Batteries	2 x 180 Ah/12 V
Air cleaner	Dry-type air cleaner with pre-cleaner, main and safety elements, control light in the operator's cab
Cooling system	Combi radiator, comprising radiators for water and charge air. Hydrostatic fan drive.

Hydraulics

Hydraulic system	Load sensing (demand controlled)
Pump type	Swash plate piston pump
Pump flow max.	256 l/min./67.6 gpm/56.3 Imp.gpm
Pressure limitation	260 bar/3,770 psi
Control valve	2 circuits, expandable to 4
Filter system	Return filter with magnetic rod in the hydraulic tank
Control	Single joystick for all blade functions

Travel Drive, Control

Transmission system	Infinitely variable hydrostatic travel drive, independent drive for each track
Travel speed*	Continuously variable
Speed range 1 (reverse):	0 – 4.0 km/h/2.5 mph (4.5 km/h/2.8 mph)
Speed range 2 (reverse):	0 – 6.0 km/h/3.7 mph (8.0 km/h/4.9 mph)
Speed range 3 (reverse):	0 – 11.0 km/h/6.8 mph (11.0 km/h/6.8 mph)
	*Travel speed ranges can be set on the travel joystick (memory function)
Electronic system	The electronic system automatically adjusts travel speed and drawbar pull to match changing load conditions
Steering	Hydrostatic
Service brake	Hydrostatic (self-locking), wear-free
Parking brake	Multi-disc brake, wear-free, automatically applied with neutral joystick position
Cooling system	Separate oil cooler, hydrostatic fan drive
Filter system	Micro cartrigde filter in the replenishing circuit
Final drive	Combination spur gear with planetary gear, double-sealed (duo cone seals) with temperature indicator
Control	Proportional single joystick for all travel and steering functions

Operator‘s Cab

Cab	Resiliently mounted cab with positive pressure ventilation, can be tilted with hand pump 40° to the rear. With integrated ROPS Rollover Protective Structure (EN ISO 3471) and FOPS Falling Objects Protective Structure (EN ISO 3449)
Operator's seat	Air suspended comfort seat, fully adjustable
Monitoring	Touch screen: display of current machine information, automatic monitoring of operating conditions, individual setting of machine parameters

Undercarriage

	L	LGP
Design	Undercarriage with rigid bottom rollers	
Mounting	Via separate pivot shafts and equalizer bar	
Track chains	Lubricated, single-grouser shoes, tensioning via steel spring and grease tensioner	
Links, each side	41	44
Track rollers, each side	7	8
Carrier rollers, each side	2	2
Sprocket segments, each side	6	6
Track shoes, standard	610 mm/24"	812 mm/32"
Track shoes, optional	560 mm/22" 711 mm/28"	914 mm/36"

Sound Levels

Operator sound exposure ISO 6396	
L_{pA} (in the cab)	75 dB(A)
Exterior sound pressure 2000/14/EC	
L_{WA} (to the environment)	112 dB(A)

Refill Capacities

Fuel tank	505 l/133.3 gal/111.1 Imp.gal
Diesel Exhaust Fluid (DEF) tank	56.5 l/14.9 gal/12.4 Imp.gal
Cooling system	49 l/12.9 gal/10.8 Imp.gal
Engine oil, with filter	43 l/11.4 gal/9.5 Imp.gal
Splitter box	8.5 l/2.2 gal/1.9 Imp.gal
Hydraulic tank	112 l/29.6 gal/24.6 Imp.gal
Final drive L, each side	17 l/4.5 gal/3.7 Imp.gal
Final drive LGP, each side	18 l/4.8 gal/4.0 Imp.gal

Drawbar Pull

Max.	436 kN
at 1.5 km/h/0.9 mph	385 kN
at 3.0 km/h/1.9 mph	190 kN
at 6.0 km/h/3.7 mph	95 kN
at 9.0 km/h/5.6 mph	63 kN

Dimensions PR 746

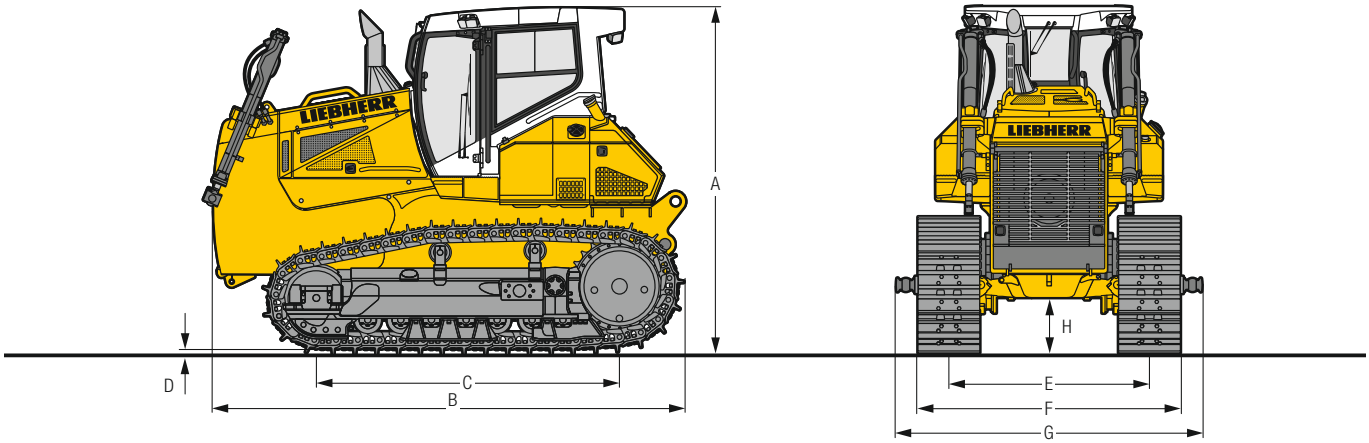

Dimensions

	Undercarriage		L	LGP
A	**Height over cab**	**mm**	3,430	3,430
		ft in	11'3"	11'3"
B	**Overall length without attachments**	**mm**	4,671	4,671
		ft in	15'4"	15'4"
C	**Length of track on ground**	**mm**	2,999	3,323
		ft in	9'10"	10'11"
D	**Height of grousers**	**mm**	71.5	71.5
		ft in	2.81"	2.81"
H	**Ground clearance**	**mm**	551	551
		ft in	1'10"	1'10"
E	**Track gauge**	**mm**	1,980	2,180
		ft in	6'6"	7'2"
G	**Width over trunnions**	**mm**	3,000	3,600
		ft in	9'10"	11'10"
F	**Track shoes 560 mm / 22"**			
	Width over tracks	**mm / ft in**	2,540 / 8'4"	–
	Tractor shipping weight [1]	**kg / lb**	21,644 / 47,717	
F	**Track shoes 660 mm / 26"**			
	Width over tracks	**mm / ft in**	2,590 / 8'6"	–
	Tractor shipping weight [1]	**kg / lb**	21,998 / 48,497	
F	**Track shoes 711 mm / 28"**			
	Width over tracks	**mm / ft in**	2,691 / 8'10"	–
	Tractor shipping weight [1]	**kg / lb**	22,705 / 50,056	
F	**Track shoes 812 mm / 32"**			
	Width over tracks	**mm / ft in**	–	2,992 / 9'10"
	Tractor shipping weight [1]	**kg / lb**		22,769 / 50,197
F	**Track shoes 914 mm / 36"**			
	Width over tracks	**mm / ft in**	–	3,094 / 10'2"
	Tractor shipping weight [1]	**kg / lb**		23,344 / 51,465

[1] Including coolant and lubricants, 20 % fuel, ROPS / FOPS cab.

Front Attachments PR 746

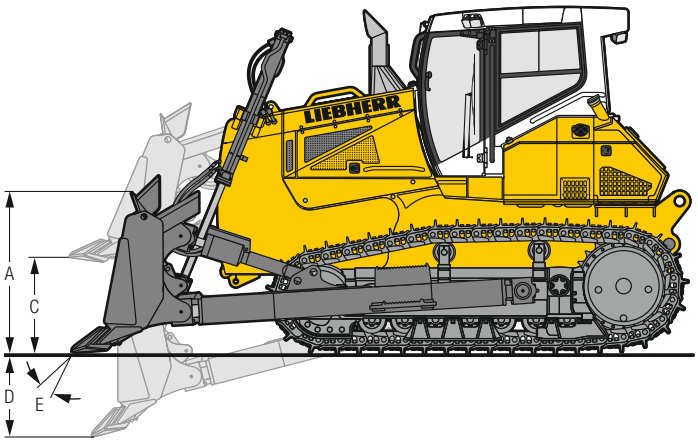

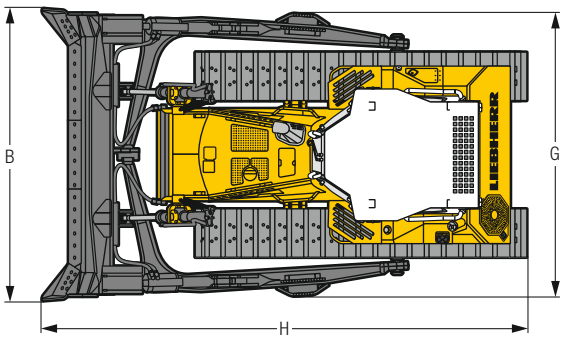

Semi-U Blade and Straight Blade

			Semi-U blade	Straight blade [2]
	Undercarriage		**L**	**LGP**
	Blade capacity, ISO 9246	**m³**	7.20	6.00
		yd³	9.42	7.85
A	**Height of blade**	**mm**	1,544	1,320
		ft in	5'1"	4'4"
B	**Width of blade**	**mm**	3,690	4,518
		ft in	12'1"	14'10"
C	**Lifting height**	**mm**	1,244	1,185
		ft in	4'1"	3'11"
D	**Digging depth**	**mm**	515	610
		ft in	1'8"	2'0"
E	**Blade pitch adjustment**		10°	10°
	Max. blade tilt	**mm**	562	567
		ft in	1'10"	1'10"
G	**Width over push frame**	**mm**	3,556	4,034
		ft in	11'8"	13'3"
H	**Overall length**	**mm**	6,129	5,955
		ft in	20'1"	19'6"
	Track shoes 560 mm / 22"			
	Operating weight [1]	**kg / lb**	25,886 / 57,069	–
	Ground pressure [1]	**kg/cm² / psi**	0.77 / 10.95	
	Track shoes 610 mm / 24"			
	Operating weight [1]	**kg / lb**	26,240 / 57,849	–
	Ground pressure [1]	**kg/cm² / psi**	0.72 / 10.24	
	Track shoes 711 mm / 28"			
	Operating weight [1]	**kg / lb**	26,947 / 59,408	–
	Ground pressure [1]	**kg/cm² / psi**	0.63 / 8.96	
	Track shoes 812 mm / 32"			
	Operating weight [1]	**kg / lb**	–	27,257 / 60,091
	Ground pressure [1]	**kg/cm² / psi**		0.51 / 7.25
	Track shoes 914 mm / 36"			
	Operating weight [1]	**kg / lb**	–	27,832 / 61,359
	Ground pressure [1]	**kg/cm² / psi**		0.46 / 6.54

[1] Including coolant and lubricants, 100 % fuel, ROPS / FOPS cab, operator, semi-U or straight blade.
[2] Rear equipment or counterweight is recommended.

Rear Attachments PR 746

1-Shank Ripper

	Parallelogram		hydraulic pitch adjustment
A	Ripping depth (max./min.)	mm	900/570
		ft in	2'11"/1'10"
B	Lifting height (max./min.)	mm	638/308
		ft in	2'1"/1'0"
C	Additional length, attachment raised	mm	1,509
		ft in	4'11"
D	Additional length, attachment lowered	mm	1,876
		ft in	6'2"
E	Overall beam width	mm	1,360
		ft in	4'6"
F	Distance between shanks	mm	–
		ft in	
	Max. pitch adjustment		25°
	Weight	kg	2,730
		lb	6,019

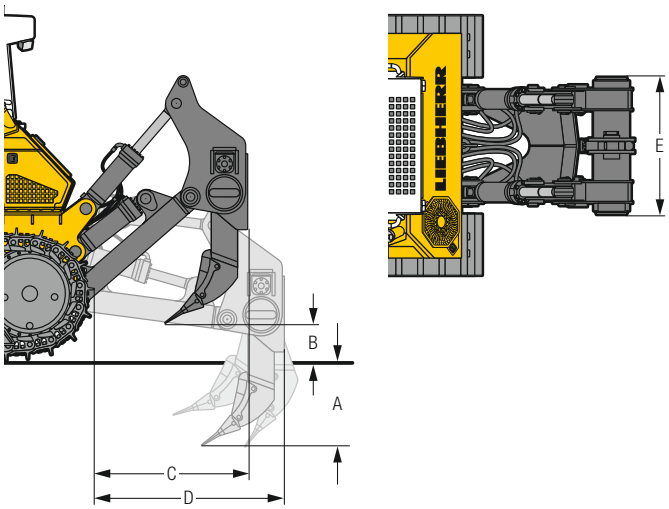

3-Shank Ripper

	Parallelogram		standard	hydraulic pitch adjustment
A	Ripping depth (max./min.)	mm	743/443	743/443
		ft in	2'5"/1'5"	2'5"/1'5"
B	Lifting height (max./min.)	mm	759/461	765/465
		ft in	2'6"/1'6"	2'6"/1'6"
C	Additional length, attachment raised	mm	1,511	1,494
		ft in	4'11"	4'11"
D	Additional length, attachment lowered	mm	1,862	1,891
		ft in	6'1"	6'2"
E	Overall beam width	mm	2,184	2,184
		ft in	7'2"	7'2"
F	Distance between shanks	mm	1,000	1,000
		ft in	3'3"	3'3"
	Max. pitch adjustment		–	25°
	Weight	kg	3,323	3,334
		lb	7,326	7,350

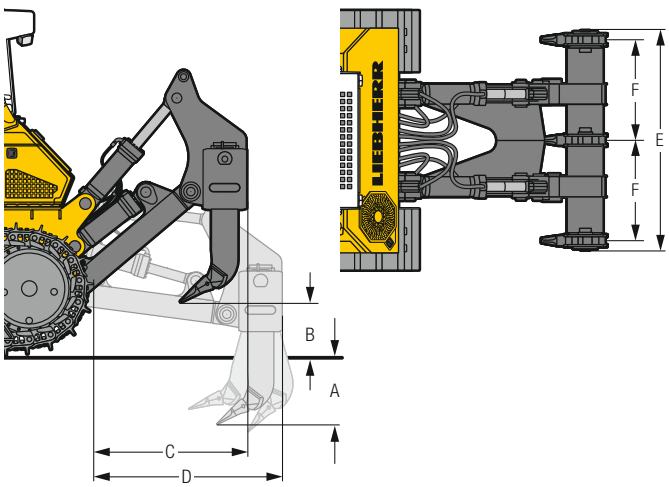

Drawbar

			rigid
A	Additional length	mm	469
		ft in	1'6"
B	Socket pin diameter	mm	50
		ft in	1.97"
C	Height of jaw	mm	599
		ft in	2'
D	Ground clearance	mm	491
		ft in	1'7"
	Jaw opening	mm	95
		ft in	3.74"
	Weight	kg	431
		lb	950

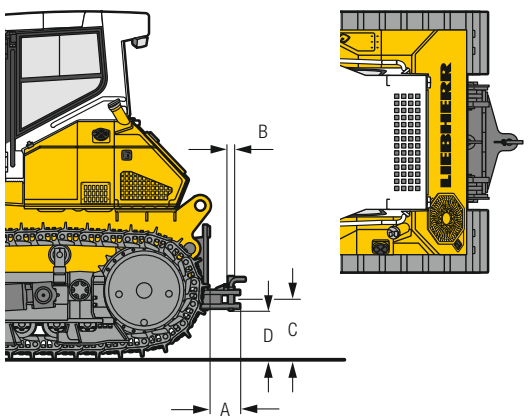

Technical Data PR 756

Engine

Liebherr Diesel engine	D 946 A7 Emission regulations according to 97/68/EC, 2004/26/EC stage IV, EPA/CARB Tier 4f
Rated power (net) ISO 9249 SAE J1349	 250 kW/340 HP 250 kW/340 HP
Maximum power (net) ISO 9249 SAE J1349	 275 kW/374 HP 275 kW/369 HP
Rated speed	1,600 rpm
Displacement	12 l/733 in³
Design	6 cylinder in-line engine, water-cooled, turbocharged, air-to-air intercooler
Injection system	Direct fuel injection, Common Rail, electronic control
Lubrication	Pressurised lube system, engine lubrication guaranteed for inclinations up to 45°, on all sides
Operating voltage	24 V
Alternator	140 A
Starter	7.8 kW/11 HP
Batteries	4 x 95 Ah/12 V
Air cleaner	Dry-type air cleaner with pre-cleaner, main and safety elements, control light in the operator's cab
Cooling system	Combi radiator, comprising radiators for water and charge air. Hydrostatic fan drive.

Hydraulics

Hydraulic system	Load sensing (demand-controlled)
Pump type	Swash plate piston pump
Pump flow, max.	256 l/min./67.6 gpm/56.3 Imp.gpm
Pressure limitation	260 bar/3,770 psi
Control valve	2 segments, expandable to 4
Filter system	Return filter with magnetic rod in the hydraulic tank
Control	Single joystick for all blade functions

Travel Drive, Control

Transmission system	Infinitely variable hydrostatic travel drive, independent drive for each track
Travel speed*	Continuously variable
Speed range 1 (reverse):	0 – 4.0 km/h/2.5 mph (4.5 km/h/2.8 mph)
Speed range 2 (reverse):	0 – 6.0 km/h/3.7 mph (8.0 km/h/4.9 mph)
Speed range 3 (reverse):	0 – 11.0 km/h/6.8 mph (11.0 km/h/6.8 mph)
	*Travel speed ranges can be set on the travel joystick (memory function)
Electronic system	The electronic system automatically adjusts travel speed and drawbar pull to match changing load conditions
Steering	Hydrostatic
Service brake	Hydrostatic (self-locking), wear-free
Parking brake	Multi-disc brake, wear-free, automatically applied with neutral joystick position
Cooling system	Separate oil cooler, hydraulic fan drive
Filter system	Micro cartridge filter in replenishing circuit
Final drive	Combination spur gear with planetary gear, double-sealed (duo cone seals) with temperature indicator
Control	Single proportional joystick for all travel and steering functions

Operator‘s Cab

Cab	Resiliently mounted cab with positive pressure ventilation, can be tilted with hand pump 40° to the rear. With integrated ROPS Rollover Protective Structure (EN ISO 3471) and FOPS Falling Objects Protective Structure (EN ISO 3449)
Operator's seat	Air suspended comfort seat, fully adjustable
Monitoring	Touch screen: display of current machine information, automatic monitoring of operating conditions, individual setting of machine parameters

Technical Data PR 756

Undercarriage

	XL	LGP
Design	Undercarriage with rigid bottom rollers or bogie suspension or oscillating idler	
Mounting	Via separate pivot shafts and equalizer bar	
Track chains	Lubricated, single grouser shoes, tensioning via steel spring and grease tensioner	
Links, each side	44	44
Track rollers, each side	7	7
Carrier rollers, each side	2	2
Sprocket segments, each side	5	5
Track shoes, standard	610 mm/24"	914 mm/3"
Track shoes, optional	560 mm/22", 711 mm/28"	965 mm/3'2"

Sound Levels

Operator sound exposure ISO 6396	
L_{pA} (in the cab)	75 dB(A)
Exterior sound pressure 2000/14/EC	
L_{WA} (to the environment)	113 dB(A)

Refill Capacities

Cooling system	55 l/14.5 gal/12.1 Imp.gal
Diesel Exhaust Fluid (DEF) tank	80 l/21.1 gal/17.6 Imp.gal
Engine oil, with filters	43 l/11.4 gal/9.5 Imp.gal
Final drive LGP, each side	26 l/6.9 gal/5.7 Imp.gal
Final drive XL, each side	20 l/5.3 gal/4.4 Imp.gal
Fuel tank	660 l/174.2 gal/145.2 Imp.gal
Hydraulic tank	129 l/34.1 gal/28.4 Imp.gal
Splitter box	8.5 l/2.2 gal/1.9 Imp.gal

Drawbar Pull

Max.	578 kN
at 1.5 km/h/0.9 mph	510 kN
at 3.0 km/h/1.9 mph	257 kN
at 6.0 km/h/3.7 mph	128 kN
at 9.0 km/h/5.6 mph	86 kN

Dimensions PR 756

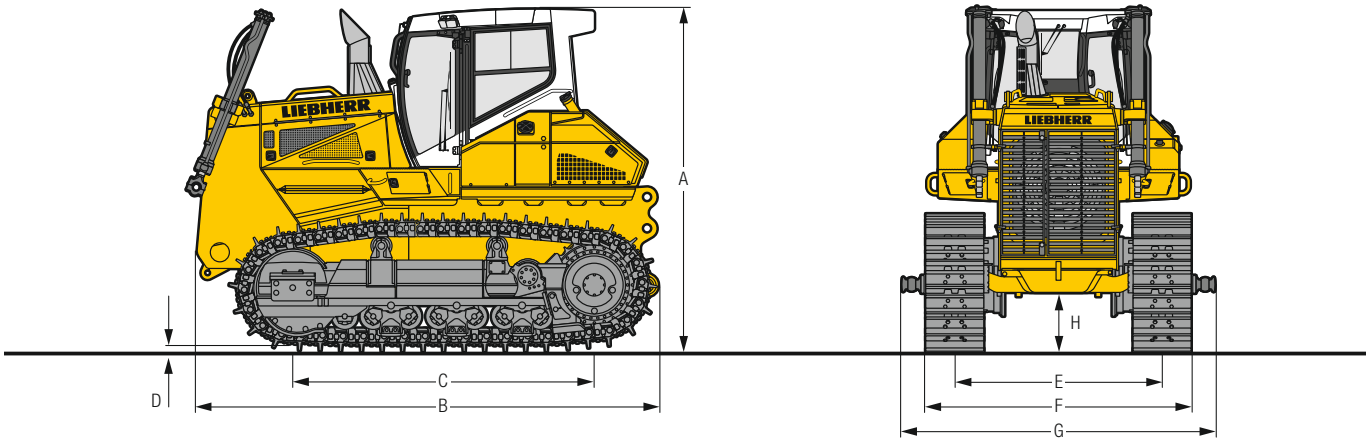

Dimensions

	Undercarriage		XL rigid bottom rollers	XL bogie suspension	XL oscillating idler double bogie suspension	LGP rigid bottom rollers
A	**Height over cab**	**mm**	3,605		3,614	3,605
		ft in	11'10"		11'10"	11'10"
B	**Overall length without attachments**	**mm**	4,885		4,885	4,885
		ft in	16'0"		16'0"	16'0"
C	**Length of track on ground**	**mm**	3,174		3,249	3,174
		ft in	10'5"		10'8"	10'5"
D	**Height of grousers**	**mm**	83		83	83
		in	3.27"		3.27"	0'3"
H	**Ground clearance**	**mm**	635		644	635
		ft in	2'1"		2'1"	2'1"
E	**Track gauge**	**mm**	2,180		2,180	2,430
		ft in	7'2"		7'2"	8'
G	**Width over trunnions**	**mm**	3,145		3,145	3,575
		ft in	10'4"		10'4"	11'9"
F	**Track shoes 560 mm / 22"**					
	Width over tracks	**mm / ft in**	2,740 / 9'	2,740 / 9'	2,740 / 9'	–
	Tractor shipping weight [1]	**kg / lb**	28,806 / 63,506	29,733 / 65,550	30,767 / 67,830	
F	**Track shoes 610 mm / 24"**					
	Width over tracks	**mm / ft in**	2,790 / 9'2"	2,790 / 9'2"	2,790 / 9'2"	–
	Tractor shipping weight [1]	**kg / lb**	29,046 / 64,035	29,973 / 66,079	31,007 / 68,359	
F	**Track shoes 711 mm / 28"**					
	Width over tracks	**mm / ft in**	2,891 / 9'6"	2,891 / 9'6"	2,891 / 9'6"	–
	Tractor shipping weight [1]	**kg / lb**	29,523 / 65,087	30,450 / 67,131	31,484 / 69,410	
F	**Track shoes 914 mm/3"**					
	Width over tracks	**mm / ft in**	–	–	–	3,344 / 11'
	Tractor shipping weight [1]	**kg / lb**				30,866 / 68,048
F	**Track shoes 965 mm/3'2"**					
	Width over tracks	**mm / ft in**	–	–	–	3,395 / 11'2"
	Tractor shipping weight [1]	**kg / lb**				31,343 / 69,099

[1] Including coolant and lubricants, 20 % fuel, ROPS / FOPS cab.

Front Attachments PR 756

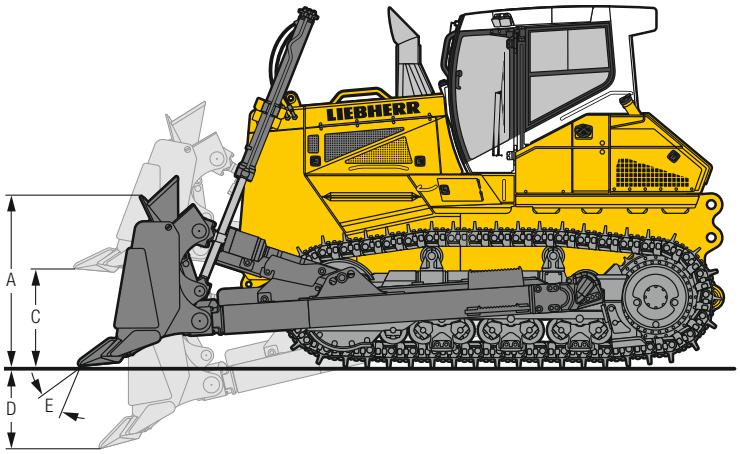

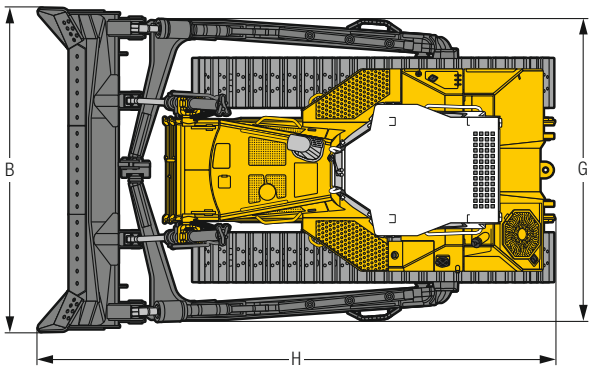

Semi-U Blade

	Undercarriage		XL rigid bottom rollers	XL bogie suspension	XL oscillating idler double bogie suspension	LGP rigid bottom rollers
	Blade capacity, ISO 9246	**m³**	8.92		8.92	9.46
		yd³	11.67		11.67	12.37
A	**Height of blade**	**mm**	1,650		1,650	1,600
		ft in	5'5"		5'5"	5'3"
B	**Width of blade**	**mm**	4,044		4,044	4,465
		ft in	13'3"		13'3"	14'8"
C	**Lifting height**	**mm**	1,372		1,381	1,403
		ft in	4'6"		4'6"	4'7"
D	**Digging depth**	**mm**	570		561	563
		ft in	1'10"		1'10"	1'10"
E	**Blade pitch adjustment**		10°		10°	2)
	Max. blade tilt	**mm**	570		570	946
		ft in	1'10"		1'10"	3'1"
G	**Width over push frame**	**mm**	3,776		3,776	4,173
		ft in	12'5"		12'5"	13'8"
H	**Overall length**	**mm**	6,449		6,449	6,452
		ft in	21'2"		21'2"	21'2"
	Track shoes 560 mm / 22"					
	Operating weight 1)	**kg / lb**	35,088 / 77,356	36,015 / 79,399	37,049 / 81,679	–
	Ground pressure 1)	**kg/cm² / psi**	0.99 / 14.08	1.01 / 14.36	1.02 / 14.5	
	Track shoes 610 mm / 24"					
	Operating weight 1)	**kg / lb**	35,328 / 77,885	36,255 / 79,928	37,289 / 82,208	–
	Ground pressure 1)	**kg/cm² / psi**	0.91 / 12.94	0.94 / 13.37	0.94 / 13.37	
	Track shoes 711 mm / 28"					
	Operating weight 1)	**kg / lb**	35,805 / 78,936	36,732 / 80,980	37,766 / 83,260	–
	Ground pressure 1)	**kg/cm² / psi**	0.79 / 11.23	0.81 / 11.52	0.82 / 11.66	
	Track shoes 914 mm/3"					
	Operating weight 1)	**kg / lb**	–	–	–	37,170 / 81,946
	Ground pressure 1)	**kg/cm² / psi**				0.64 / 9.1
	Track shoes 965 mm/3'2"					
	Operating weight 1)	**kg / lb**	–	–	–	37,410 / 82,475
	Ground pressure 1)	**kg/cm² / psi**				0.61 / 8.67

1) Including coolant and lubricants, 100 % fuel, ROPS / FOPS cab, semi-U blade, operator.
2) Mechanical blade pitch adjustment.

Front Attachments PR 756

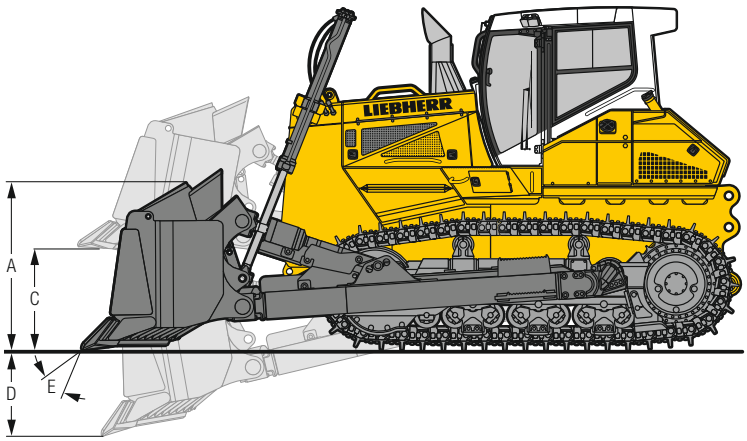

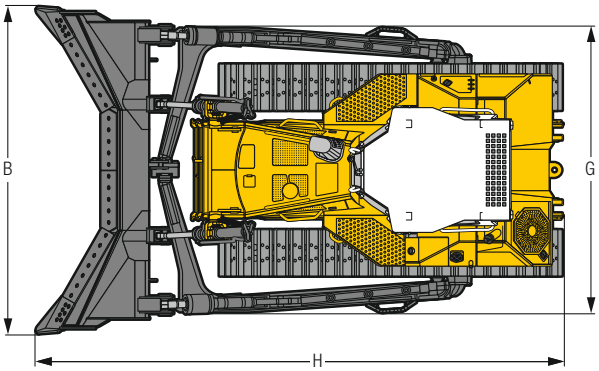

U Blade

	Undercarriage		XL rigid bottom rollers	XL bogie suspension	XL oscillating idler double bogie suspension
	Blade capacity, ISO 9246	**m³**	11.8		11.8
		yd³	15.43		15.43
A	**Height of blade**	**mm**	1,700		1,700
		ft in	5'7"		5'7"
B	**Width of blade**	**mm**	4,281		4,281
		ft in	14'1"		14'1"
C	**Lifting height**	**mm**	1,360		1,369
		ft in	4'6"		4'6"
D	**Digging depth**	**mm**	566		557
		ft in	1'10"		1'10"
E	**Blade pitch adjustment**		10°		10°
	Max. blade tilt	**mm**	604		604
		ft in	2'		2'
G	**Width over push frame**	**mm**	3,776		3,776
		ft in	12'5"		12'5"
H	**Overall length**	**mm**	6,872		6,872
		ft in	22'7"		22'7"
	Track shoes 560 mm / 22"				
	Operating weight [1]	**kg / lb**	35,058 / 77,290	35,985 / 79,333	37,019 / 81,613
	Ground pressure [1]	**kg/cm² / psi**	0.99 / 14.08	1.01 / 14.36	1.02 / 14.5
	Track shoes 610 mm / 24"				
	Operating weight [1]	**kg / lb**	35,298 / 77,819	36,225 / 79,862	37,259 / 82,142
	Ground pressure [1]	**kg/cm² / psi**	0.91 / 12.94	0.94 / 13.37	0.94 / 13.37
	Track shoes 711 mm / 28"				
	Operating weight [1]	**kg / lb**	35,775 / 78,870	36,702 / 80,914	37,736 / 83,194
	Ground pressure [1]	**kg/cm² / psi**	0.79 / 11.23	0.81 / 11.52	0.82 / 11.66

[1] Including coolant and lubricants, 100 % fuel, ROPS / FOPS cab, U blade, operator.

Rear Attachments PR 756

1-Shank Ripper

	Parallelogram		hydraulic pitch adjustment
A	Ripping depth (max./min.)	mm	1,203/423
		ft in	3'11"/1'5"
B	Lifting height (max./min.)	mm	1,040/260
		ft in	3'5"/0'10"
C	Additional length, attachment raised	mm	1,820
		ft in	6'
D	Additional length, attachment lowered	mm	2,374
		ft in	7'9"
E	Overall beam width	mm	1,370
		ft in	4'6"
F	Distance between shanks	mm	–
		ft in	
	Max. pitch adjustment		31°
	Max. penetration force	kN	123.9
		lbf	27,854
	Max. pryout force	kN	208.8
		lbf	46,940
	Weight	kg	3,638
		lb	8,020

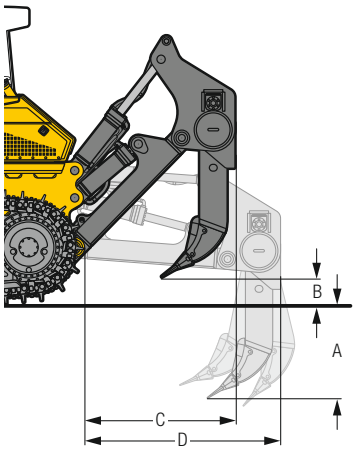

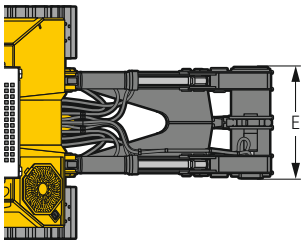

3-Shank Ripper

	Parallelogram		hydraulic pitch adjustment
A	Ripping depth (max./min.)	mm	796/481
		ft in	2'7"/1'7"
B	Lifting height (max./min.)	mm	982/667
		ft in	3'3"/2'2"
C	Additional length, attachment raised	mm	1,820
		ft in	6'
D	Additional length, attachment lowered	mm	2,373
		ft in	7'9"
E	Overall beam width	mm	2,434
		ft in	8'
F	Distance between shanks	mm	1,100
		ft in	3'7"
	Max. pitch adjustment		31°
	Max. penetration force	kN	131.8
		lbf	29,630
	Max. pryout force	kN	208.8
		lbf	46,940
	Weight	kg	4,821
		lb	10,628

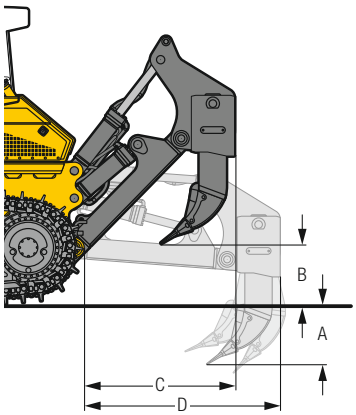

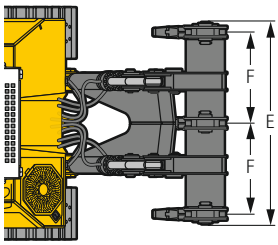

Drawbar

			rigid
A	Additional length	mm	463
		ft in	1'6"
B	Socket pin diameter	mm	60
		ft in	2.36"
C	Height of jaw	mm	712
		ft in	2'4"
D	Ground clearance	mm	589
		ft in	1'11"
	Jaw opening	mm	105
		ft in	4.13"
	Weight	kg	576
		lb	1,270

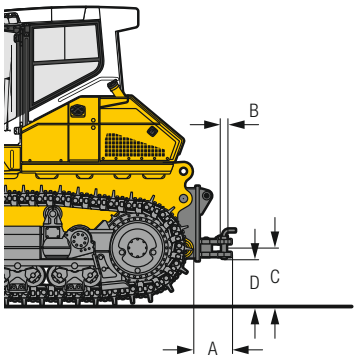

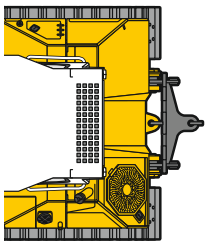

Equipment

Base Machine	736	746	756
Additional handle on cab footstep	+	•	•
Additional handle on fuel tank	+	•	•
Air filter with automatic dust ejector	+	+	+
Air filter, dry type, dual step, with pre-filter	•	•	•
Air pre-cleaner Top Air	+	+	+
Auto Idle	+	+	+
Automatic engine shut-off	+	+	+
Battery compartment, lockable	•	•	•
Coal arrangement	+	+	+
Cold environment arrangement	+	+	+
Cooling fan front, tilt-out	+	+	+
Cooling fan rear, tilt-out	–	•	•
Cooling fan, hydraulically driven	•	•	•
Cooling fan, reversible	+	+	+
Diesel Exhaust Fluid (DEF) tank, lockable	+	+	+
Dust filter system pressurised	+	+	+
Engine compartment doors, lockable	•	•	•
Forestry arrangement	+	+	+
Fuel pre-filter	•	•	•
Fuel pre-filter, with electric heater	+	+	+
Fuel water separator	•	•	•
Fuel water separator, with electric heater	+	+	+
Grade control ready kit	+	1)	1)
Landfill arrangement	+	+	+
LiDAT – Data transmission system	•	•	•
Liebherr diesel engine emission stage IV/Tier 4f	•	•	•
Liebherr hydraulic oil, biologically degradable	+	+	+
Lugs for crane lifting, front	•	•	•
Lugs for crane lifting, rear	+	+	+
Radiator guard, hinged	•	•	•
Radiator, wide-meshed	•	•	•
Refuelling pump, electric	+	+	+
Spade with mounting bracket	+	+	+
Special paint scheme	+	+	+
Tool kit, basic	•	•	•
Tool kit, extended	+	+	+
Towing hitch rear	•	•	•
Towing lug front	•	•	•
Woodchip arrangement	+	+	+

Hydraulics System	736	746	756
Blade float function	•	•	•
Blade quick drop function	•	•	•
Control block for 2 circuits	•	•	•
Hydraulic kit for ripper	+	+	+
Hydraulic kit for winch	+	+	+
Oil filter in hydraulic tank	•	•	•
Variable flow pump, load-sensing	•	•	•

Travel Drive	736	746	756
Emergency stop	•	•	•
Final drives planetary gear	•	•	•
Inching brake pedal	+	•	•
Load limit control, electronic	•	•	•
Machine-release switch	•	•	•
Parking brake, automatic	•	•	•
Seat contact switch	•	•	•
Travel control, 3 speed ranges	•	•	•
Travel drive joystick, detended	+	+	+
Travel drive joystick, proportional	•	•	•
Travel drive, hydrostatic	•	•	•

Operator‘s Cab	736	746	756
Additional control panel for air conditioning on side console	+	+	+
Air-conditioner	•	•	•
Armrests 3D adjustable	•	•	•
Cab heating	•	•	•
Coat hook	•	•	•
Dome light	•	•	•
Extension of cab door footstep	+	+	–
Fire extinguisher	+	+	+
Footrest on the right side of the front console	+	+	+
Joysticks, longitudinally adjustable	•	•	•
Operator's seat Comfort, air-suspended	•	•	•
Operator's seat Premium, air-suspended	+	+	+
Pressurised cab	•	•	•
Protective grid for rear window	+	+	+
Radio	+	+	+
Radio preparation kit	•	•	•
Rear-view camera	+	+	+
Rear-view mirror, inside	•	•	•
Rear-view mirrors, external	+	+	+
ROPS/FOPS integrated	•	•	•
Safety glass tinted	•	•	•
Sliding window left	+	+	+
Sliding window right	+	+	+
Socket 12 V	•	•	•
Storage nets	+	+	+
Stowage compartment, air-conditioned	•	•	•
Sun visor, front	+	+	+
Tiltable cab	•	•	•
Touch-controlled colour display	•	•	•
Warm water heating	•	•	•
Windshield washer system	•	•	•
Windshield wipers front, rear, doors, with intermittent function	•	•	•

• = Standard
+ = Option
– = not available
1) on demand at your dealer

Equipment

Electrical System	736	746	756
1 additional working light on each lift cylinder	+	+	+
1 additional working light on the ripper	–	–	+
1 working light on each lift cylinder	•	•	•
2 additional working light on the cab, rear	+	+	+
2 cold start batteries	•	•	•
2 working lights on the cab, rear	•	•	•
4 working light on the cab, front	•	•	•
All working lights in LED version	+	+	+
Back-up alarm	•	•	•
Back-up alarm, acoustic and visual	+	+	+
Back-up alarm, switchable	+	+	+
Battery main switch	•	•	•
Battery main switch, lockable	+	+	+
Beacon	+	+	+
Horn	•	•	•
Immobiliser, electronic	+	+	+
On-board voltage 24 V	•	•	•
Socket 24 V	•	•	•

Undercarriage	736	746	756
Master link, two-piece	•	•	•
Sprocket segments with recesses	+	+	+
Sprocket segments, bolted	•	•	•
Track frame, closed	•	•	•
Track guard, full length (with rigid bottom rollers)	+	+	+
Track guide (undercarriage with bogie suspension)	–	–	•
Track guide centre part (with rigid bottom rollers)	+	+	+
Track guide, front and rear (with rigid bottom rollers)	•	•	•
Track pads with mud holes [2]	+	+	+
Track shoes, heavy duty	[1]	+	•
Track shoes, moderate service	•	•	–
Tracks, oil-lubricated	•	•	•
Undercarriage L	[1]	+	–
Undercarriage XL	+	–	+
Undercarriage LGP	+	+	+
Undercarriage with bogie suspension	–	–	+
Undercarriage with oscillating idler and double bogie suspension	–	–	+
Undercarriage with rigid bottom rollers	•	•	•
Undercarriage with rotary bushings FTB [2]	+	–	–

Attachments Front	736	746	756
6-way blade	+	–	–
6-way blade with hinged corners	+	–	–
Guards for hydraulic cylinders, 6-way blade	+	–	–
Guards for hydraulic cylinders, semi-U blade	–	–	+
Hydraulic pitch angle adjustment	–	+	+
Mechanical angle blade	+	+	+
Semi-U blade	+	+	+
Spill plate	+	+	+
Straight blade	+	+	[1]
Trash rack	+	+	+
U blade	[1]	[1]	+
Wear plates on push frame	+	+	+
Wear plates on semi-U blade	+	+	+

Attachments Rear	736	746	756
Counterweight, rear (2,000 kg/4,409 lb / 3,200 kg/7,055 lb / 4,000 kg/8,818 lb)	+	+	+
Drawbar rear, rigid	+	+	+
Mounting plate for third-party equipment	+	+	+
Ripper, 1 shank	+	+	+
Ripper, 1 shank with hydraulic pin puller	–	–	+
Ripper, 3 shank	+	+	+
Winch	+	+	+

• = Standard
+ = Option
– = not available
[1] on demand at your dealer
[2] available track shoes on demand at your dealer

Options and/or special attachments, supplied by vendors other than Liebherr, are only to be installed with the knowledge and approval of Liebherr in order to retain warranty.

Printed in Germany by Eberl RG-BK-OT LWT/VM 12238714-1-05.18_enGB-US

Liebherr-Werk Telfs GmbH
Hans Liebherr-Straße 35, A-6410 Telfs
☎ +43 50809 6-100, Fax +43 50809 6-7772
www.liebherr.com, E-Mail: lwt.marketing@liebherr.com
www.facebook.com/LiebherrConstruction